This document is the property of Nian-Yeong Corporation and is delivered on the express condition that it is not to be disclosed, reproduced or used, in whole or in part, for manufacture or sale by anyone other than Nian-Yeong Corporation without its prior consent, and that no right is granted to disclose or to use any information in this document.

CUSTOMER DRAWING

REV.	DESCRIPTION	APPVL. BY	DATE	ECN NO.
A	RELEASE	Fido Weng	22/12/08'	
B				
C				

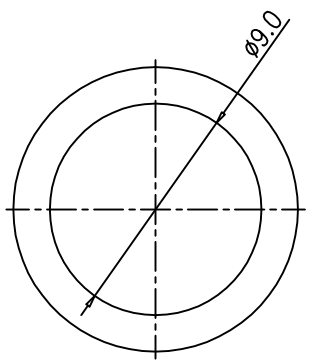

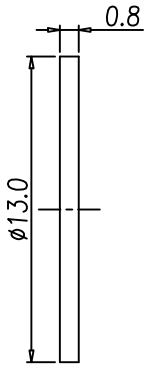

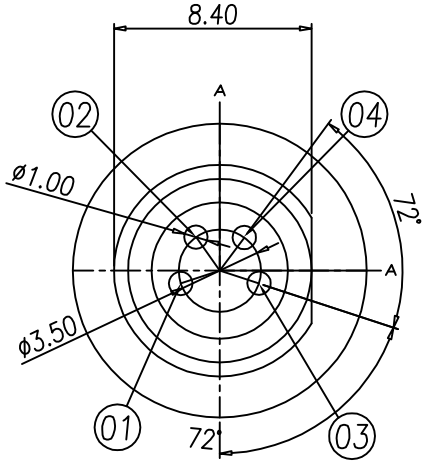

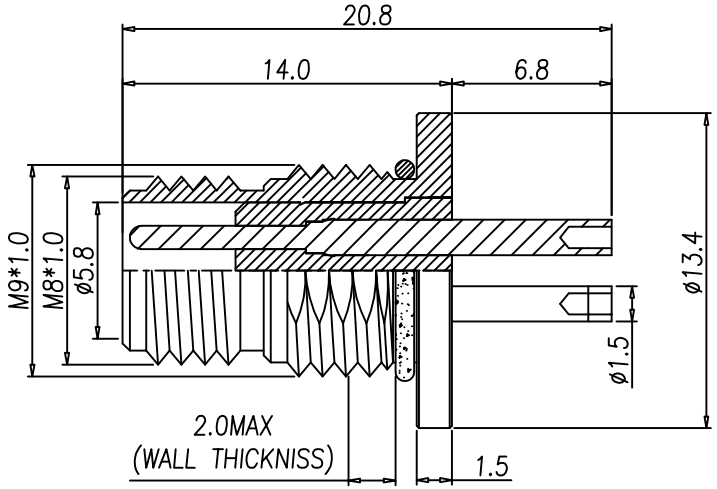

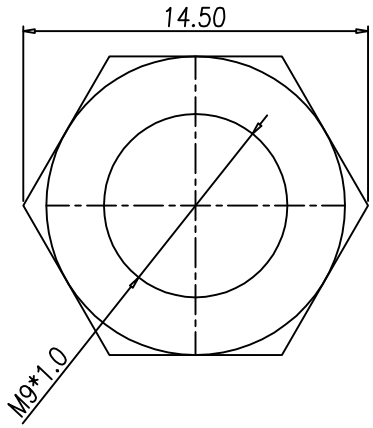

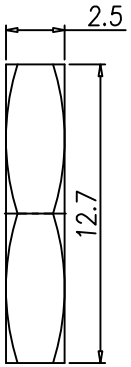

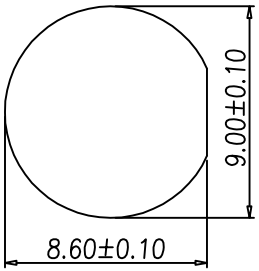

PANEL CUT-OUT

1. MATERIAL :
   1-1. HOUSING : PBT UL94V-0 ; COLOR : BLACK
   1-2. CONTACT : BRASS
   1-3. SHELL : BRASS
   1-4. WASHER : BRASS
   1-5. NUT : BRASS
   1-6. O-RING : EPDM ; COLOR : BLACK
2. FINISH :
   2-1. CONTACT : SEE TABLE A
   2-2. SHELL : SEE TABLE A
   2-3. WASHER : NICKET PLATING
   2-4. NUT : SEE TABLE A
3. ELETRICAL SPECICATION :
   3-1. Rated current : 4A
   3-2. Rated voltage : 60V
   3-3. Water proof : IPX7
4. Environmental :
   4-1. Operation Temperature : -40℃~85℃

TABLE A/表A

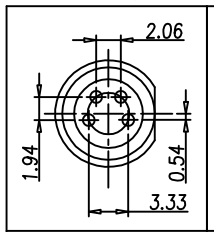

WP-04M2-120-11
WP-04M2-16
WP-04M2-42

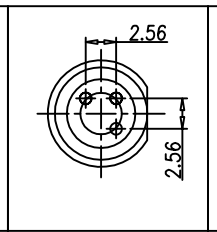

WP-03M2-63-11
WP-03M2-08

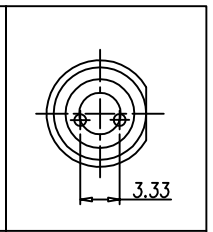

WP-02M2-07

P/N	SHELL & NUT FINISH	CONTACT FINISH
WP-02M2-07	NICKEL / 鎳 60u"~100u"	GOLD 10u"
WP-03M2-63-11	NICKEL / 鎳 60u"~100u"	GOLD FLASH
WP-03M2-08	NICKEL / 鎳 60u"~100u"	GOLD 10u"
WP-04M2-120-11	NICKEL / 鎳 60u"~100u"	GOLD FLASH
WP-04M2-16	NICKEL / 鎳 60u"~100u"	GOLD 10u"
WP-04M2-42	BLACK NICKEL / 黑鎳 60u''~100u"	GOLD 10u"

DRAW	HULK	APPVL	Ku Chou	UNIT	mm	TOLERANCE .x ±0.20 .xx ±0.10 .xxx ±0.05 .xxxx ±0.03 ANGULA ±1°	NIAN YEONG ENTERPRISE 年永實業有限公司	TITLE	M8 (M)前鎖M9*1.0焊線式(洗單邊)		SHEET 1/1
CHECK	Emily Suen			SCALE	1:1			PART NO.	SEE TABLE A	DWG NO. QC3499	VERSION A