This document is the property of Nian-Yeong Corporation and is delivered on the express condition that it is not to be disclosed, reproduced or used, in whole or in part, for manufacture or sale by anyone other than Nian-Yeong Corporation without its prior consent, and that no right is granted to disclose or to use any information in this document.

# CUSTOMER DRAWING

| REV. | DESCRIPTION | APPROVED BY | DATE | ECN NO. |
|---|---|---|---|---|
| A | RELEASE | Yeh Chou | 2017/09/07 | |
| B | 增加剖視圖 & 修正墊圈材質與電度規格 | Ku Chou | 02/05/18' | |
| C | | | | |

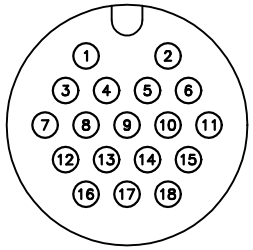


PIN CONFIGURATION

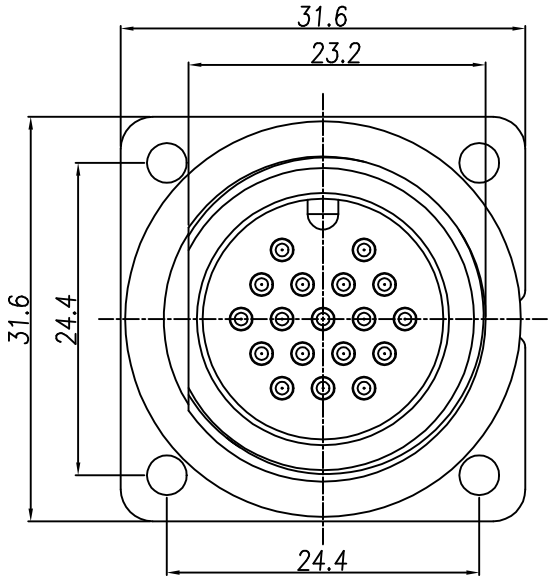


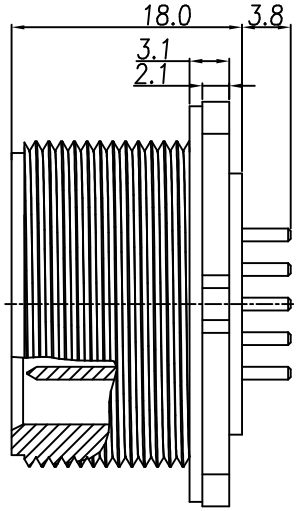


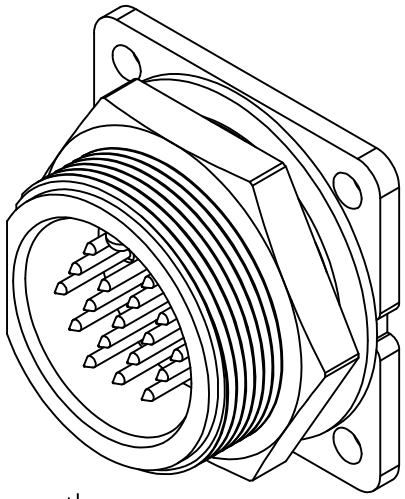

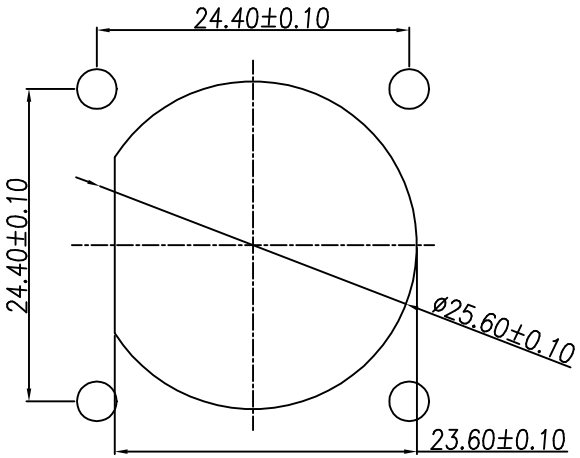


RECOMMEND PANEL HOLE

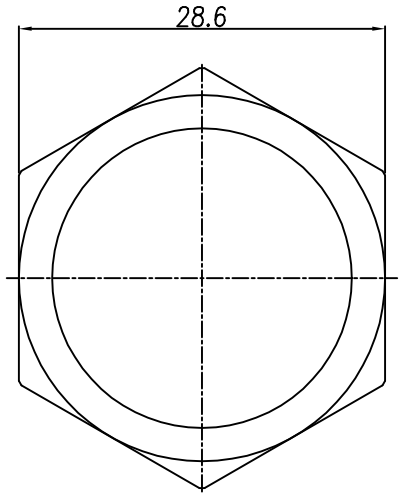


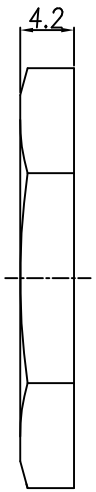


Hex Nut

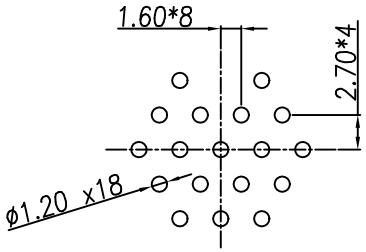


PCB LAYOUT

1. MATERIAL :
   1-1. HOUSING : PA66
   1-2. CONTACT : BRASS
   B 1-3. GASKET : SILICONE
   1-4. HEX NUT : PA66
2. FINISH :
   B 2-1. CONTACT : GOLD FLASH PLATED
3. ELECTRICAL SPECIFICATION :
   3-1. Rated current : 5A
   3-2. Rated Voltage : 300V
4. Environmental :
   4-1. Operation Temperature : -40℃~105℃

| | | | | | | | | | | | |
|---|---|---|---|---|---|---|---|---|---|---|---|
| DRAWN | Yeh Chou | APP'D | KU Chou | UNIT | mm | TOLERANCE .x ±0.20 .xx ±0.10 .xxx ±0.05 .xxxx ±0.03 ANGULA ±1° | NIAN YEONG ENTERPRISE 年永實業有限公司 | TITLE | D SIZE 18P (M) 螺牙 DIP (方型檔板) | | SHEET 1/1 |
| CHK'D | KU Chou | | | SCALE | 1:1 | | | PART NO. | WP-18M2-12-11 | DWG NO. QC7886 | VERSION B |