This document is the property of Nian-Yeong Corporation and is delivered on the express condition that it is not to be disclosed, reproduced or used, in whole or in part, for manufacture or sale by anyone other than Nian-Yeong Corporation without its prior consent, and that no right is granted to disclose or to use any information in this document.

CUSTOMER DRAWING

REV.	DESCRIPTION	APPROVED BY	DATE	ECN NO.
A	RELEASE	KU CHOU	02/02/21'	
B				
C				

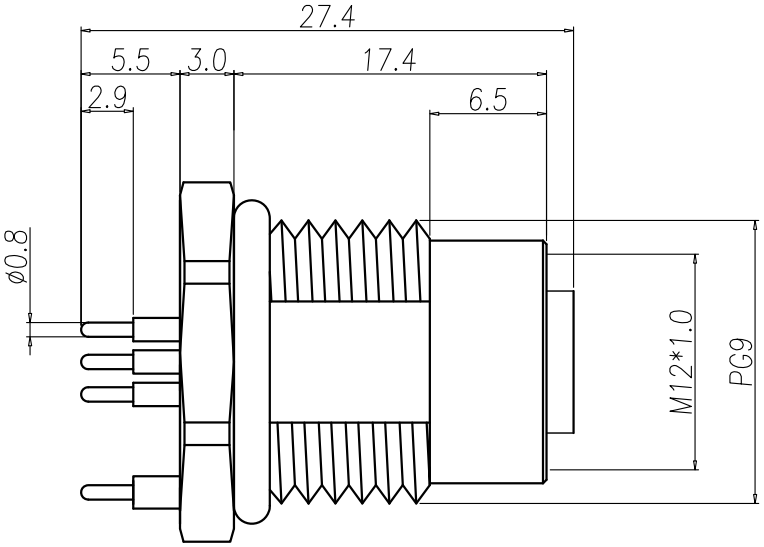

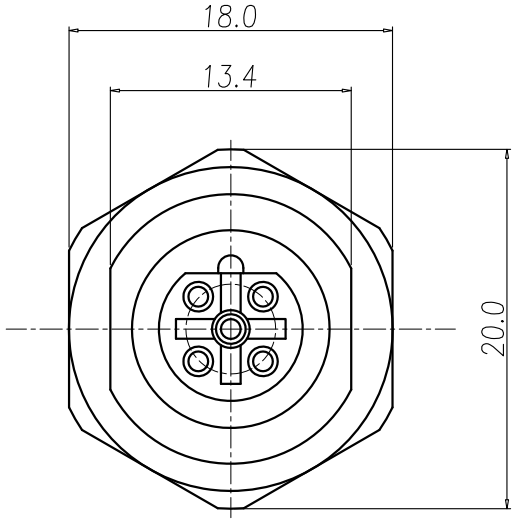

1. MATERIAL :
   - 1-1. HOUSING : PBT UL94V-0 ; COLOR : BLACK
   - 1-2. CONTACT : BRASS
   - 1-3. NUT : BRASS
   - 1-4. SHELL : BRASS
   - 1-5. O-RING : EPDM ; COLOR : BLACK
2. FINISH :
   - 2-1. CONTACT : 10 MICRO INCHES MIN. GOLD PLATED UNDER PLATE : NICKEL
   - 2-2. NUT : NICKEL PLATED
   - 2-3. SHELL : NICKEL PLATED
3. ELECTRICAL SPECIFICATION :
   - 3-1. Rated current : 4A
   - 3-2. Rated Voltage :4PIN 250V ; 5PIN 60V
   - 3-3. Water proof: IP67
4. Environmental :
   - 4-1. Operation Temperature : -40℃~85℃

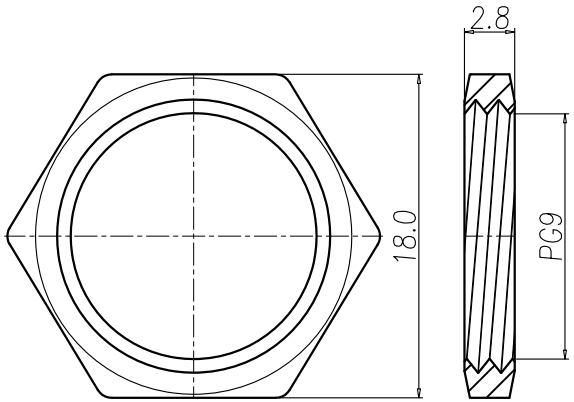

NUT

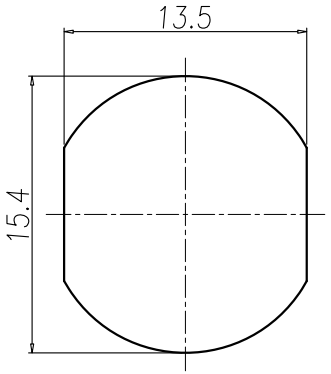

RECOMMENDPANEL CUT-OUT

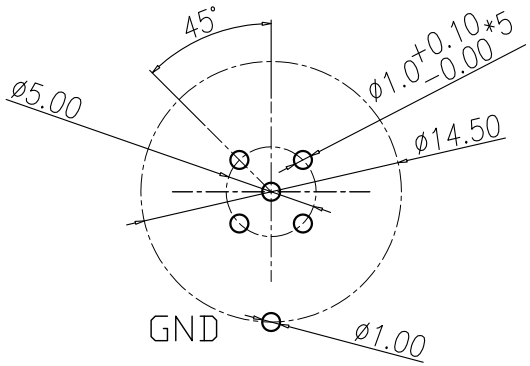

RECOMMEND P.C.B LAYOUT

TABLE A

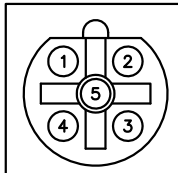	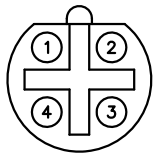
WP-05F3-20-11	4PIN

Pin Assignments
Front View

DRAWN	EMILY SUEN	APP'D	KU CHOU	UNIT	mm	TOLERANCE .x ±0.20 .xx ±0.10 .xxx ±0.05 .xxxx ±0.03 ANGULA ±1°	NIAN YEONG ENTERPRISE 年永實業有限公司	TITLE	防水頭 M12 B-code (F) 插鎖Pg9插件式(無螺帽+接地)		SHEET 1/1
CHK'D	KU CHOU			SCALE	1:1			PART NO.	SEE TABLE A	DWG NO. QC10097	VERSION A