This document is the property of Nian-Yeong Corporation and is delivered on the express condition that it is not to be disclosed, reproduced or used, in whole or in part, for manufacture or sale by anyone other than Nian-Yeong Corporation without its prior consent, and that no right is granted to disclose or to use any information in this document.

CUSTOMER DRAWING

REV.	DESCRIPTION	APPROVED BY	DATE	ECN NO.
A	RELEASE	Fido Weng	15/06/23"	
B				
C				

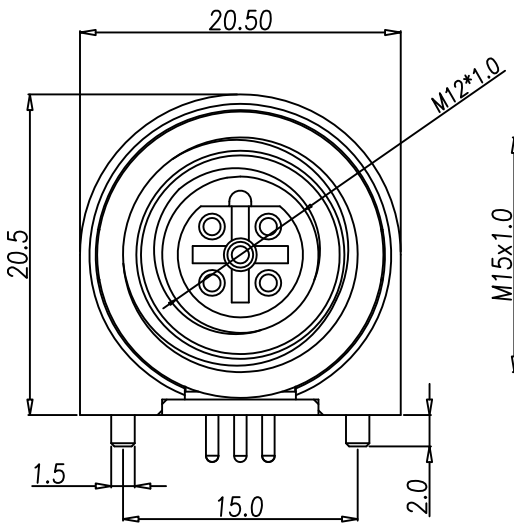

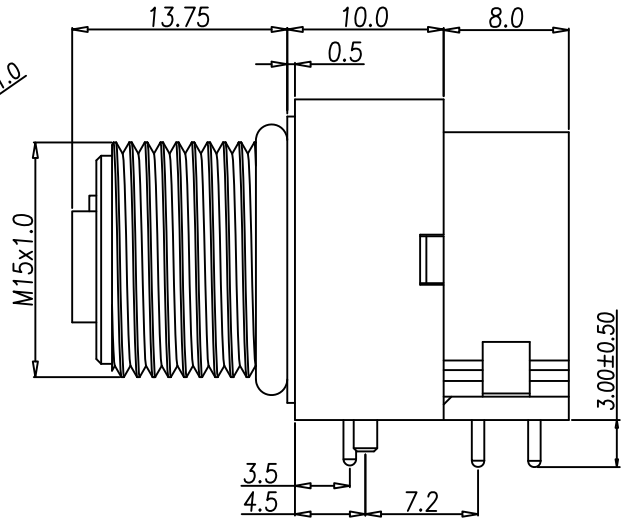

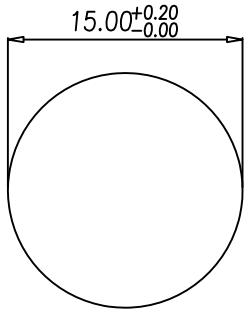

PANEL CUT-OUT

1. MATERIAL :
   1-1. HOUSING : PBT UL94V-0 ; COLOR : BLACK
   1-2. CONTACT : BRASS
   1-3. NUT : BRASS
   1-4. SHELL : BRASS
   1-5. O-RING : EPDM ; COLOR : BLACK
   1-6. BACK HOUSING : PBT UL94V-0 ; COLOR : BLACK
   1-7. DOWN HOUSING : PBT UL94V-0 ; COLOR : BLACK
2. FINISH :
   2-1. CONTACT : SEE TABLE A
   2-2. NUT : NICKEL OVER ALL
   2-3. SHELL : NICKEL OVER ALL
3. ELECTRICAL SPECIFICATION :
   3-1. Rated current : 4A
   3-2. Rated voltage : 60V
   3-3. Water proof : IP67
4. Environmental :
   4-1. Operation Temperature : -40°C~+85°C

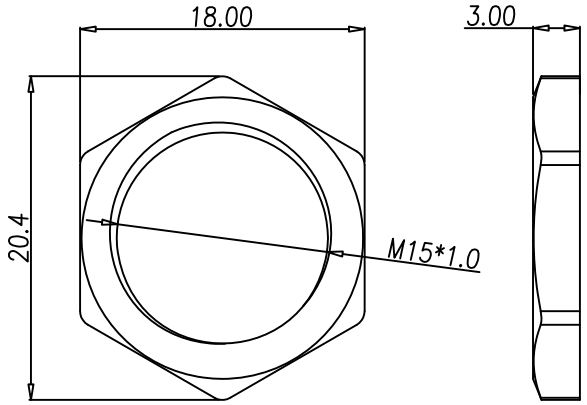

NUT

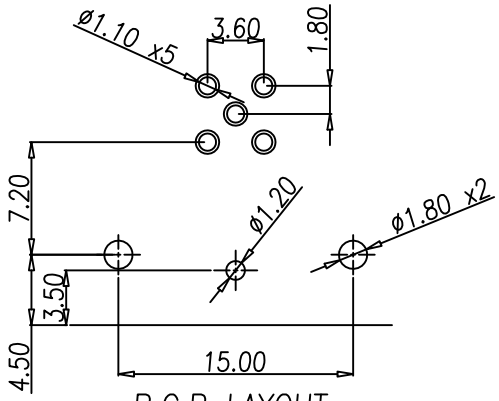

P.C.B LAYOUT

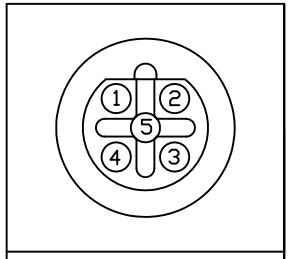

Pin Assignments
Front View

TABLE A

PART NO	FINISH
WP-05F3-34-11	10u" GOLD PLATED
WP-05F3-27-11	GOLD FLASH PLATED

DRAWN	Mark Kao	APPEND	Emily Suen	UNIT	mm	TOLERANCE .x ±0.20 .xx ±0.10 .xxx ±0.05 .xxxx ±0.03 ANGULA ±1°	NIAN YEONG ENTERPRISE 年永實業有限公司	TITLE	WATERPROOF M12*1.0 5PIN(F) B coded 90度板端		SHEET 1/1
CHK'D	Emily Suen			SCALE	1:1			PART NO.	SEE TABLE A	DWG NO. QC10693	VERSION A